EQUIVALENT IC TYPES SHOWN DUE TO SW LIMITATION THIS SCHEMATIC CAPTURED BY R GRIEB TAUNTEK.COM 2015

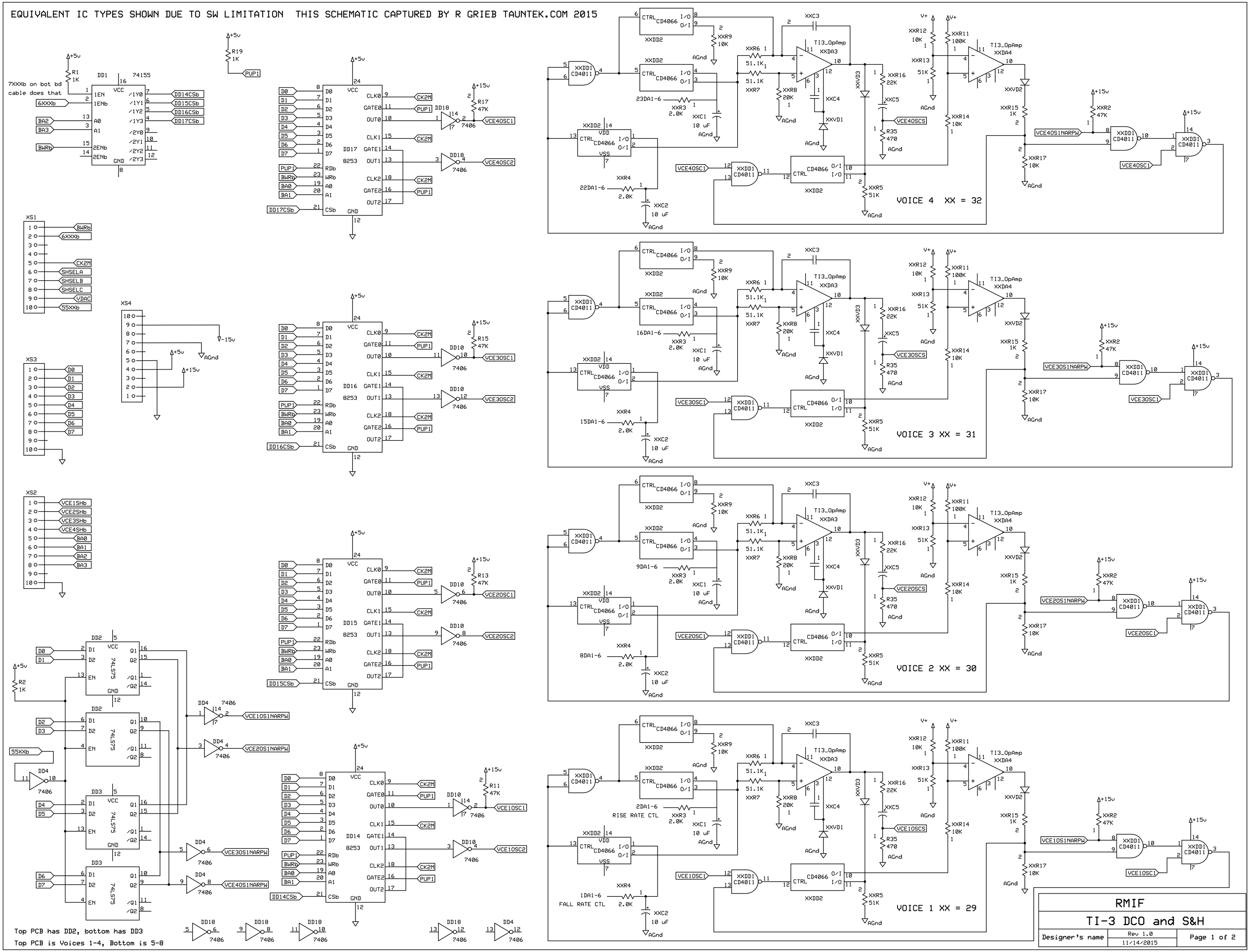

RMIF

TI-3 DCO and S&H

Designer's name | Rev 1.0 | 11/14/2015 | Page 1 of 2